DT7837

ARM Module for Embedded Applications

The DT7837 is a high accuracy dynamic signal acquisition module for noise, vibration, and acoustic measurements with an embedded Cortex-A8 600MHz ARM processor. Data from four, 24-bit, IEPE (ICP®) sensor input data can be algorithmically processed in real time with the optional use of a 24-bit stimulus D/A generator and the results presented to a host for analysis.

Figure 1. The DT7837 provides 4 IEPE input channels along with an embedded ARM processor for real-time processing and analysis of sound and vibration measurements.

Key Features

- **Dynamic Signal Analyzer** with embedded ARM
- **4 IEPE channels,** 24-bit resolution, up to 102.4kHz simultaneous sampling
- **Digital I/O (8 In/8 Out),** General-Purpose Counter/Timer, Measure Counter, Tachometer, and External Digital (TTL) Trigger
- **High speed,** 24-bit, stimulus analog output for dynamic waveform generation
- **TI AM335x ARM Cortex-A8 MPU** with 2GB on-board NAND Flash memory
- **Open source Linux** computing platform using the TI AM335x SDK Essentials Version 7.0
- **Micro SD-Card interface** for measurement results and raw data
- **USB-host port** for additional SSD hard disk, Wireless LAN, or GSM communication stick
- **RS232 (3.3V) serial interface** to communicate with PLC
- **Ethernet and USB client** for host communication
- **Numerous example programs included** to get you up and running quickly

DT7837 Block Diagram

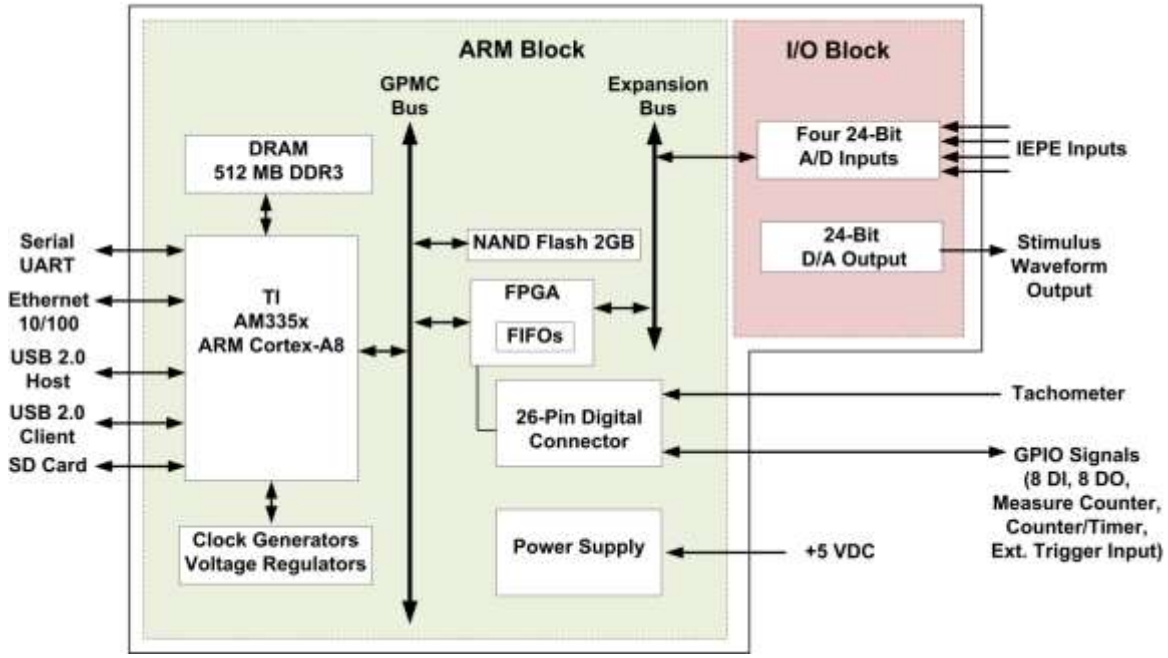

Figure 2. The DT7837 block diagram shows the base board (ARM block) with the TI AM335x ARM Cortex-A8 processor, FPGA, memory and support peripherals as well as interfaces for a USB host and client, Ethernet, power, SD card and digital I/O, counters and timers. The daughter board (I/O Block) has the A/D and D/A, and is mated to the ARM Block through a connector.

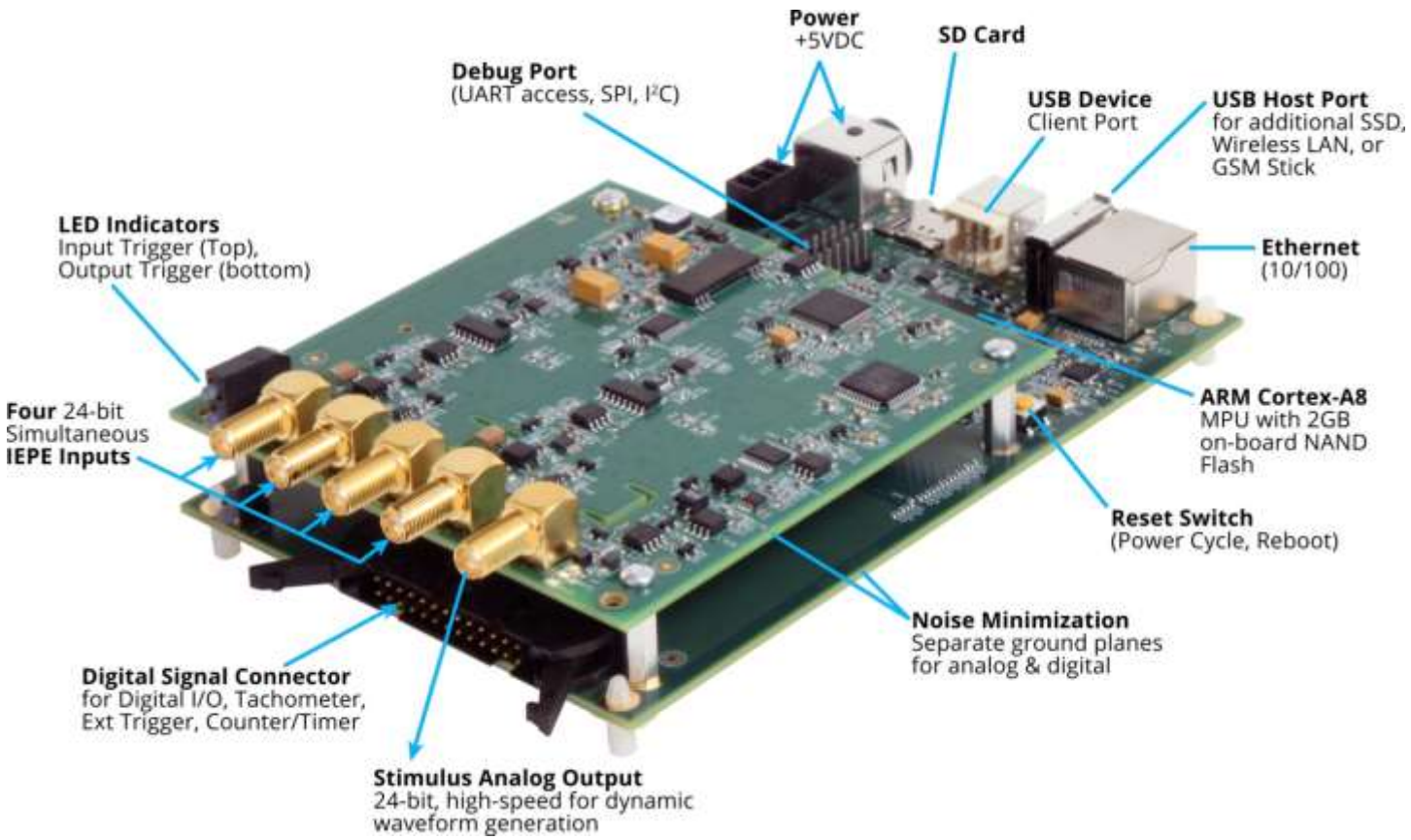

Figure 3. The DT7837 is a small 2-board sandwich providing the ARM block, an industrialized BeagleBone Black derivative, and the I/O Block for A/D, D/A, and digital signals. The result is a high performance, real-time sound & vibration system for embedded applications using Open Source LINUX.

Figure 4. The DT7837 is designed for embedded applications. The I/O block (top board) contains the analog I/O circuitry and the ARM block (bottom board) houses the ARM processor, digital I/O circuitry, and the connectors for communicating with the host computer and other devices.

DT7837 Overview

The DT7837 module is an open-source Linux computing platform with a high-accuracy, dynamic signal analyzer front-end, making it ideal for embedded applications that require noise, vibration, and acoustic measurements. The module is composed of two boards. The bottom board contains the ARM block and the top board contains the I/O block. Users can embed the module into their own enclosure and/or system.

ARM Block

The ARM block of the DT7837 module uses the TI Sitara AM3352 processor and its associated peripherals to provide an open-source, single-board computer. The AM3352 supports many different interfaces, many of which are shared on the configurable I/O pins. In addition to the AM3352, the DT7837 module uses an embedded NAND flash and an FPGA.

Analog Input Channels

The DT7837 provides four analog input channels. IEPE sensors can be connected to these inputs. Software-selectable gains of 1 and 10 provide effective input ranges of ±10V and ±1V. Each analog input channel uses a 24-bit Delta-Sigma analog-to-digital converter (ADC) that provides anti-aliasing filtering based on the clock rate. In addition to acquiring data from the analog input channels, the DT7837 supports the ability to simultaneously acquire the value of the tachometer input, general-purpose counter/timer, measure counter, and digital input port in the analog input stream, allowing precise correlation of all input signals.

IEPE Support

Applications that require accelerometer, vibration, noise, or sonar measurements often use IEPE sensors. IEPE conditioning is built-in to the analog input circuitry of the DT7837 module. Each analog input channel provides the following capabilities for IEPE support:

- **Excitation current source** – Internal excitation current source of 4mA.
- **Coupling Type** – Software-programmable AC coupling or DC coupling.
- **Compliance Voltage** – +20V

Input Triggers

The DT7837 module supports the following sources for starting acquisition:

- software trigger
- external digital (TTL) positive or negative trigger
- threshold trigger

Tachometer Input

The DT7837 supports a tachometer input signal with a range of ±30V. The frequency or period between two edges of the tachometer input signal can be measured to calculate the rotational speed of the high level tachometer input. The value can then be returned the value in the analog input data stream. The starting edge (either rising or falling) of the tachometer signal is programmable. An internal 12MHz counter is used for the measurement.

Digital I/O Lines

The DT7837 module supports one digital input port, consisting of 8 digital input lines and one digital output port, consisting of 8 digital output lines. Users can synchronously read all 8 digital input lines or write to all 8 digital output lines. Users can also return the value of the digital input port in the analog input stream to correlate digital input and other input measurements or update the value of the digital output port in the analog output stream.

The Digital connector on the board provides access to the digital I/O lines through general-purpose I/O pins. Users can redefine these pins for use as the counter/timer gate, counter/timer input, counter/timer output, or external trigger signal, as required by their application.

General Purpose Counter/Timer

The general-purpose counter/timer on the DT7837 module supports the following counter/timer operation modes:

- **Event Counting** – Counts the number of rising edges that occur on the counter's input signal whenever the gate is active
- **Rate Generation** – Generates a continuous pulse output signal whenever the gate is active
- **Non-repeatable one-shot** – Generates a single output pulse whenever the gate is active (after the pulse period from the previous output pulse expires). Any gate signals that occur while the pulse is being output are not detected.
- **Idle** – The counter no longer drives the clock output signal.

Users can program the gate type, C/T clock source, pulse width, pulse output period, and pulse output polarity.

Measure Counter

DT7837 module provides one measure counter. Using this counter, you can measure the frequency, period, or pulse width of a single signal or the time period between two signals and return the value in the analog input stream. This is useful for correlating the analog input data with digital positional data, measuring the frequency of a signal, or as a tachometer. An internal 48 MHz counter is used for the measurement, yielding a resolution of 20.83 ns (1/48 MHz).

Analog Output Channel

The DT7837 provides one high speed, 24-bit analog output with an output range of ±10V. The module provides a two-pole Butterworth filter and quiet start circuitry to prevent noise from interfering with the output signal.

The DT7837 supports single-value and continuous analog output operations. In addition, the digital output port can be updated simultaneously with analog output channel for simultaneous stimulus and control applications.

Analog Output Clock

The DT7837 supports an internal D/A clock, which is derived from the 48MHz crystal oscillator. The clock frequency of the D/A output clock can be programmed to a value between 30kHz and 216KHz for pacing output operations.

Output Triggers

To start an output operation, the following output triggers are supported:

- software trigger
- external digital (TTL) positive or negative

Simultaneous Input and Output Operations

The DT7837 supports the ability to continuously acquire data from the input stream and continuously output data from the channels in the output stream simultaneously.

Triggering Acquisition on Multiple Modules

The internal clock on the DT7837 module is derived from the 48 MHz crystal oscillator and provides the timing for the analog input subsystem on the module. You can start acquisition on multiple modules by connecting all modules to a shared external trigger input. Using software, you must define one of the general-purpose input pins on the Digital connector on each DT7837 module as the external trigger signal. When triggered, the modules start acquiring data at the same time.

Software

The DT7837 modules run Linux 3.12 (Debian distribution) with custom loadable kernel modules (LKM) or device drivers.

The DT7837 device drivers and numerous example application programs reside on the DT7837 module. The drivers are loaded when the DT7837 module is powered up. The device drivers (DT7837 driver and DT7837 USB driver), shown in the block diagram below, expose the functionality of the module to Linux user space applications using virtual file interfaces.

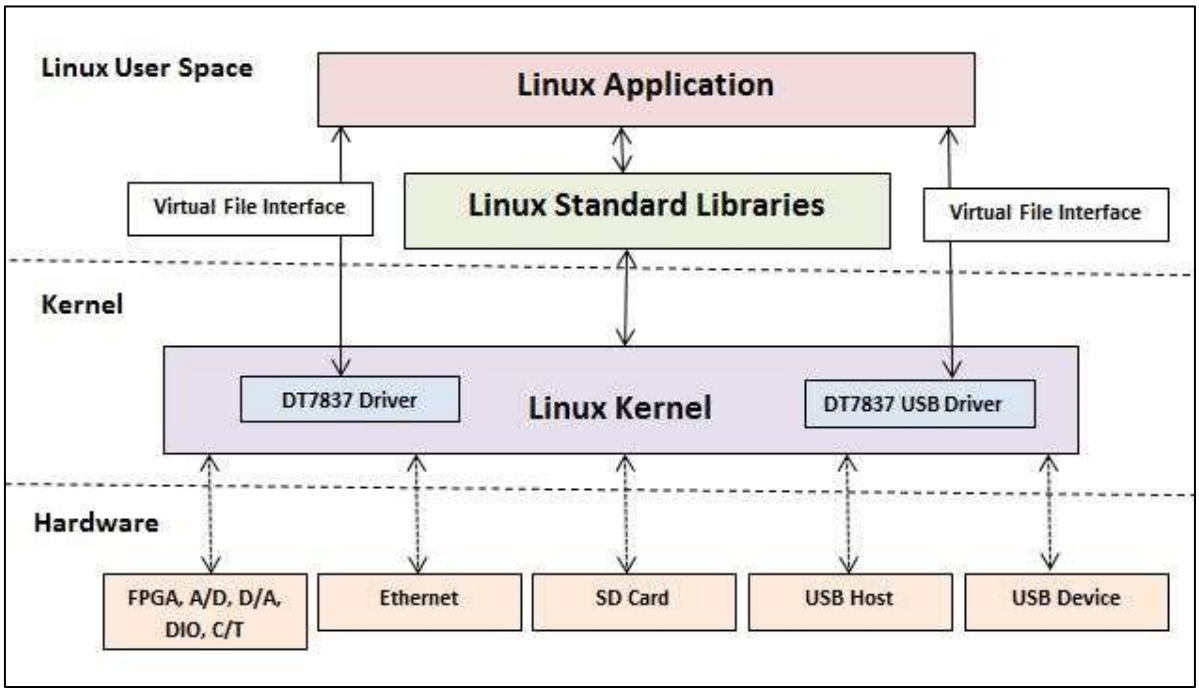

Figure 5. The DT7837 runs Linux 3.12 with custom loadable kernel modules, i.e., "device drivers" for the board hardware. These "drivers" expose the functionality of the board to Linux user space applications.

The DT7837 module uses the following virtual files to access its subsystems:

- /dev/dt7837-ain – Analog input subsystem.
- /dev/dt7837-aout – Analog output subsystem.
- /dev/dt7837-din – Digital input subsystem.
- /dev/dt7837-dout – Digital output subsystem.
- /dev/dt7837-tach – Tachometer input subsystem.
- /dev/dt7837-measure – Measure counter subsystem.
- /dev/dt7837-ctr-tmr – Counter/timer subsystem.
- /dev/dt7837-stream-in – Input stream.
- /dev/dt7837-stream-out– Output stream.

The USB device functionality of the DT7837 is accessible to user-space embedded applications using the following files:

- /dev/dt7837-ep1in - EP1 IN endpoint.
- /dev/dt7837-ep1out - EP1 OUT endpoint.
- /dev/dt7837-ep2in - EP2 IN endpoint.
- /dev/dt7837-ep2out - EP2 OUT endpoint.
- /dev/dt7837-ep3out - EP3 OUT endpoint.
- /dev/dt7837-ep4out - EP4 OUT endpoint.
- /dev/dt7837-ep5out - EP5 OUT endpoint.

User applications can perform standard file operations such as **open**, **close**, **read**, and **write** on the virtual files to access and control the hardware or to send data to the USB host through an IN endpoint and receive data from the USB host through an OUT endpoint.

For instance, to access the digital input subsystem on the DT7837 module, the application uses the virtual file handle for the digital input subsystem (/dev/dt7837-din) as follows.

1. Open the file /dev/dt7837-din, thereby allowing access to the digital input subsystem.
2. If supported, configure parameters for the digital input subsystem using IOCTL commands.
3. Read from the file, which in turn, reads the value of the digital input port and returns a value.
4. Close the file.

DT7837 Example Programs

The DT7837 ships with many example programs that demonstrate the capabilities of the hardware. They also illustrate how user programs communicate with the DT7837 drivers using file I/O commands and IOCTLs. All examples are written in ANSI C, are open source, and include make files that allow them to be built using the TI SDK tool chain and cross compilers.

Users can build these example programs, use them to test their hardware, and modify them as needed to get up and running quickly.

Figure 6. DT7837 example programs allow users to get up and running applications.

The following example programs are provided:

- aio-in – Performs an asynchronous analog input operation, generating a sine wave, triangle waveform, or sawtooth waveform
- function-gen – Performs an asynchronous analog output operation, generating a sine wave, triangle, or sawtooth waveform using Direct Digital Synthesis.
- aout-single – Performs a synchronous write operation on the analog output channel.
- clk-gen – Uses the counter/timer to generate an output clock.
- common – Includes common functions used by the other example programs.
- data-logger – Acquires data from all the channels in the input stream and stores it to a file. Many file formats are supported.
- usb-loopback – Demonstrates use of the gadget USB driver to send data from a host application to the DT7837 using and OUT USB pipe and to receive data from the DT7837 using IN USB pipe.
- digio – Performs a synchronous write operation on the digital output port, and then reads back the value that was output by performing a synchronous read operation on the digital input port.
- dt7837-calibration – A command-line program that calibrates the analog input and analog output circuitry of the DT7837 module.
- event-counter - Performs an event counting operation.
- sig-analyzer – An embedded web server and signal analyzer. It acquires data from two analog input channels and performs and FFT on the data. The results are displayed to a client's web browser when connected to the device.
- fir-filter - Performs an input stream and an output stream operation simultaneously and continuously. Data from the input stream is filtered and then output from the analog output channel.

- web-calibration – A web-based calibration program that calibrates the analog input and analog output circuitry of the DT7837 module.
- web-server – An embedded web server that performs most of the functions of the DT7837 module and saves the acquired data to a file.

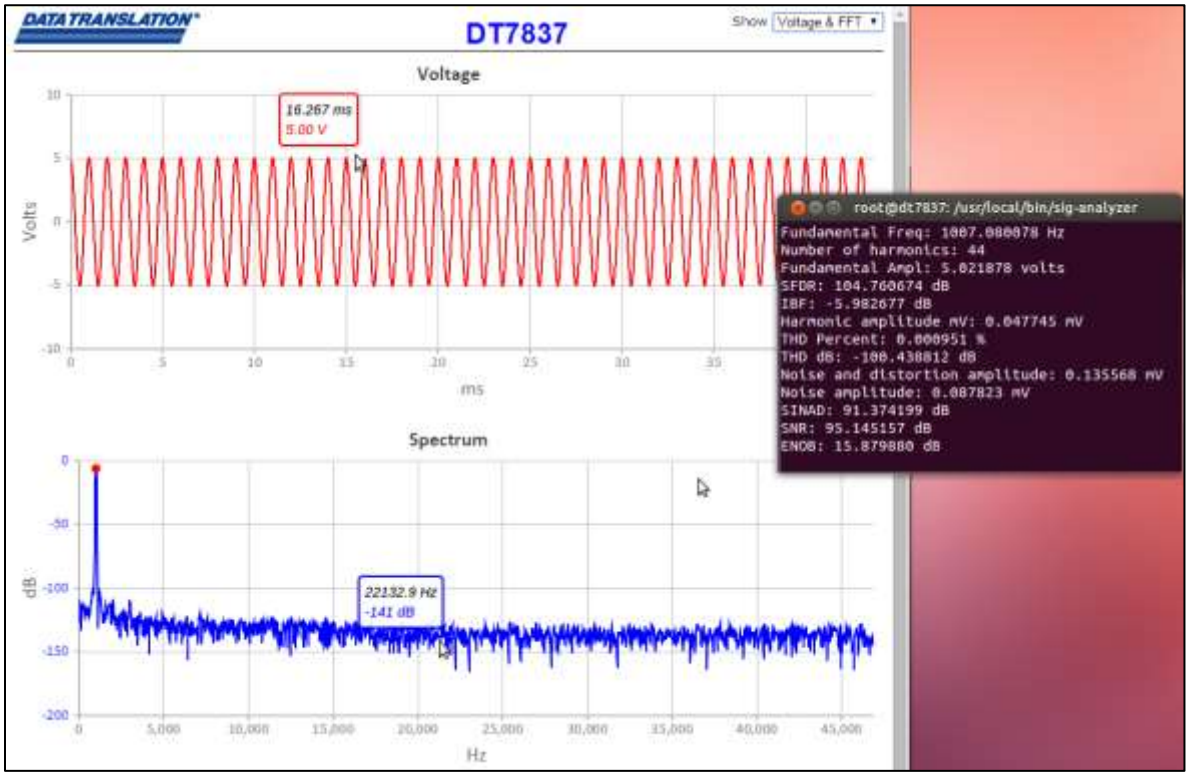

Figure 7. The DT7837 showing outstanding dynamic performance on a -6dB sine wave at 1kHz, including ENOB (Effective Number of Bits) of 15.9.

Ordering Summary

- **DT7837** 4-channel ARM Module

Accessories:

- **DT7837 Accessory Kit** Includes STP26 Screw Terminal Panel, EP405 USB To Serial TTL Debug Cable, EP361 Power Supply, USB Cable, and Ethernet Cable

Or order separately:

- **STP26** Screw Terminal Panel with EP406 Cable
- **EP405** USB to Serial TTL Debug Cable
- **EP361** +5V DC Power Supply and Cable